Broadley-James ® Corporation
19 Thomas • Irvine, CA 92618
Tel: (949) 829-5555 • Fax: (949) 829-5560

Title:

Model 350-61-H060 FermProbe® Sensor Housing

Doc No:	Rev:
P2800	A
Pg: 1 / 1	Date: 18-Mar-02

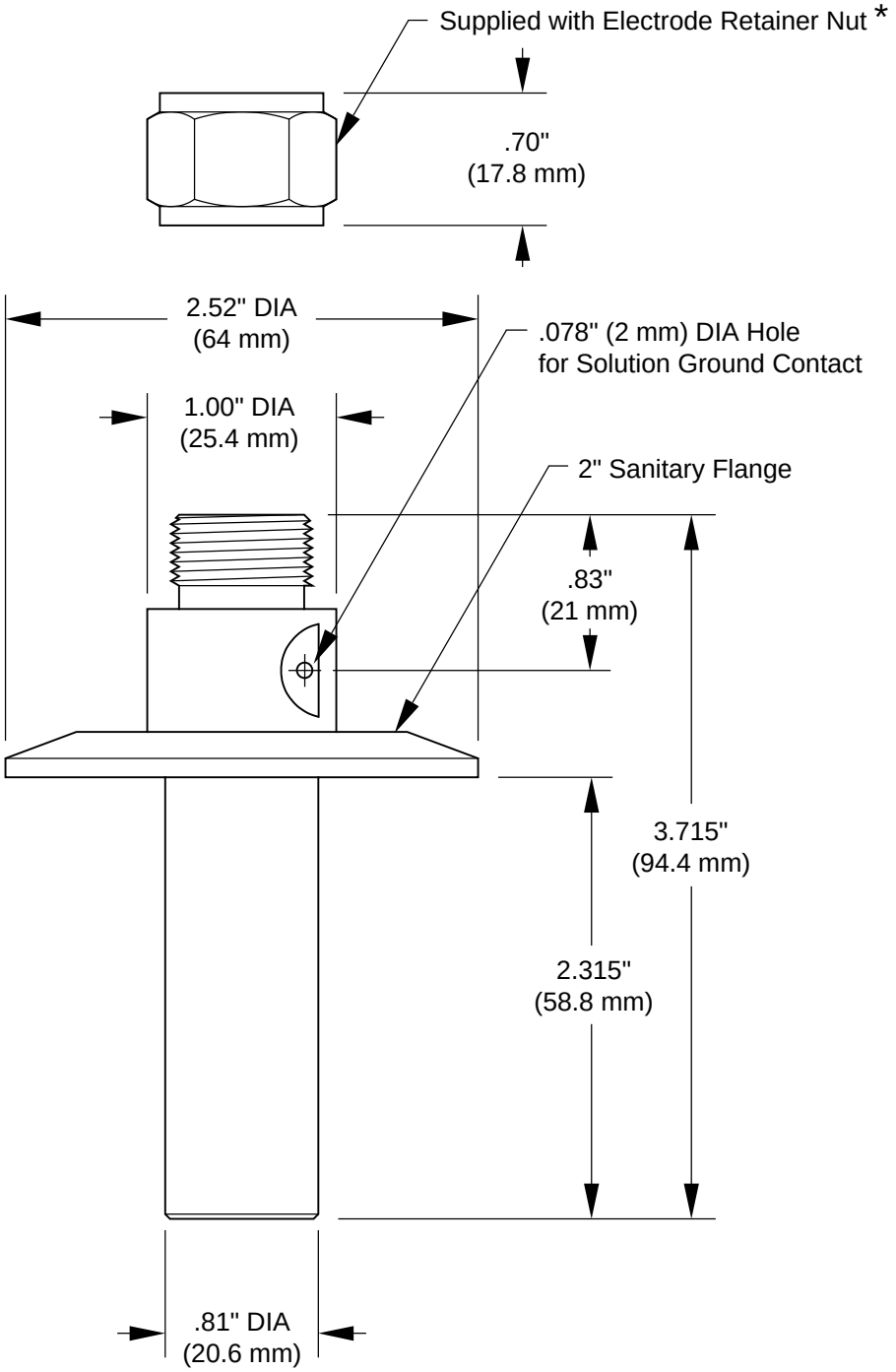

* Not required when housing is used with F-615 Electrode.