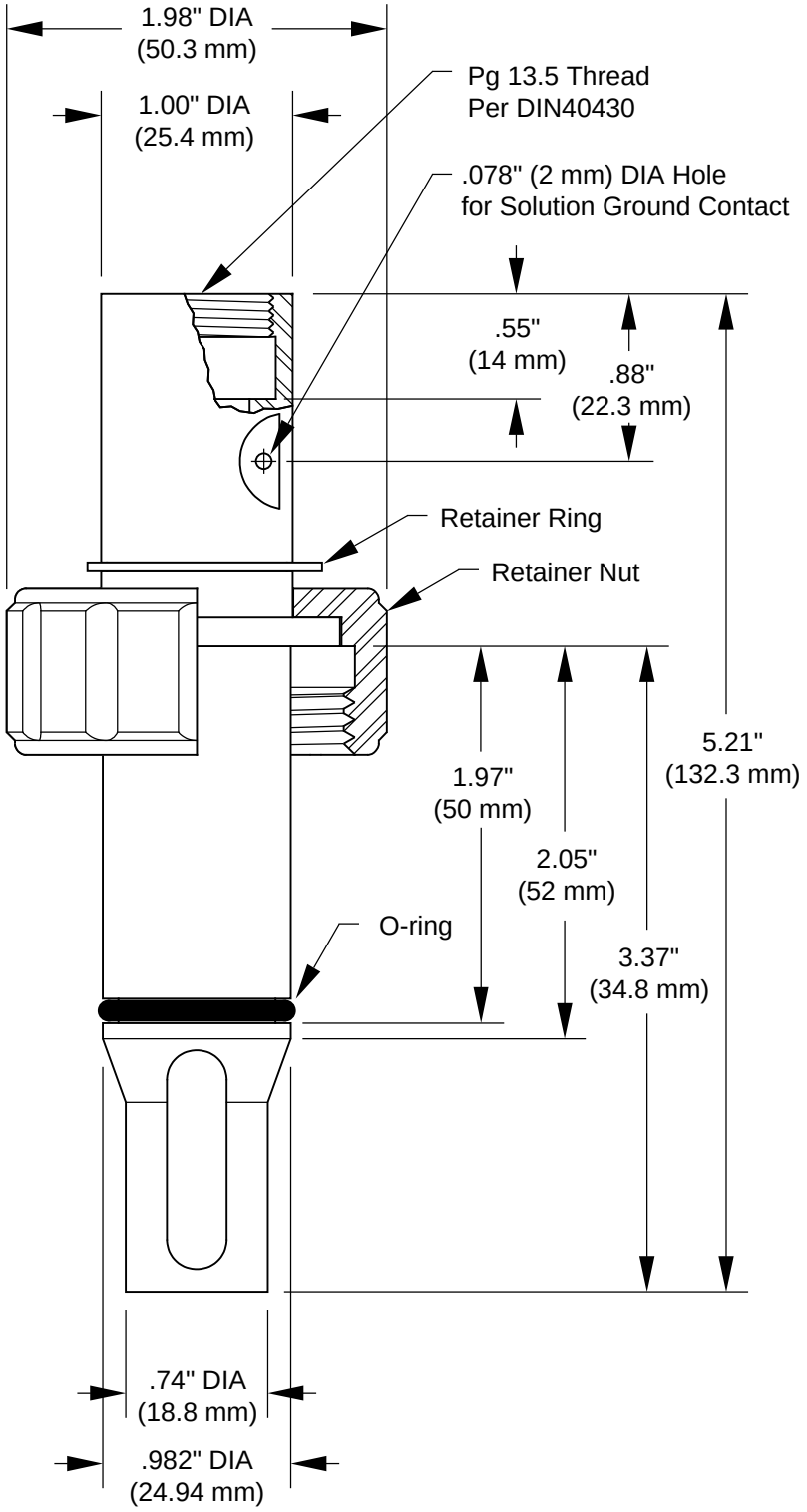Broadley-James® Corporation 19 Thomas • Irvine, CA 92618 Tel: (949) 829-5555 • Fax: (949) 829-5560	Title: **Model 356-62-H085 FermProbe® Sensor Housing**	Doc No: **P2566**	Rev: **--**
		Pg: 1 / 1	Date: 27-Nov-01